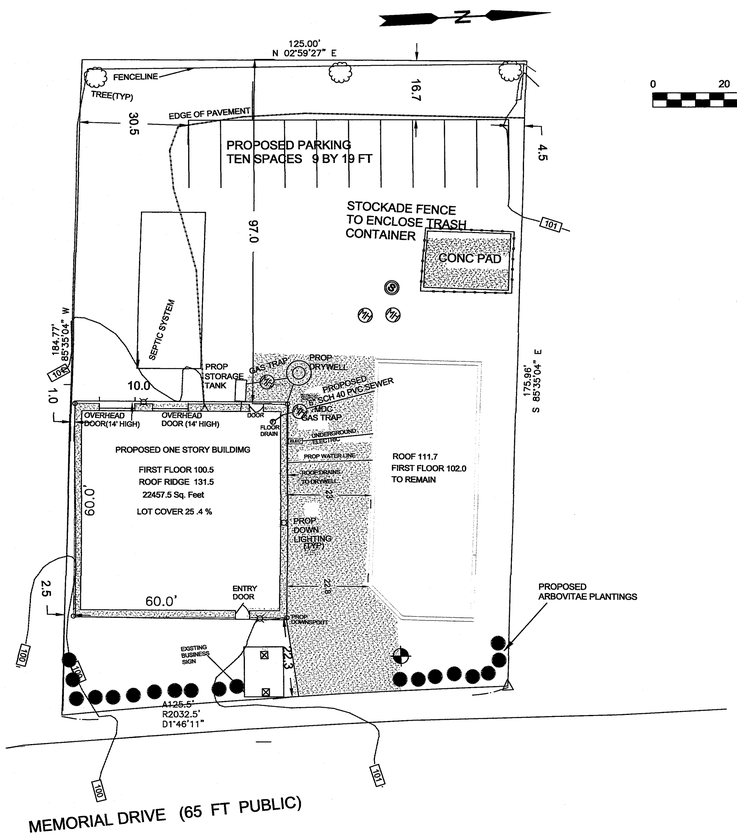

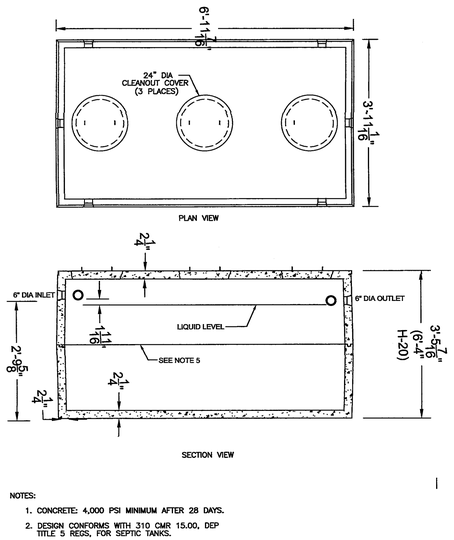

NOTES:

1. CONCRETE: 4,000 PSI MINIMUM AFTER 28 DAYS.
2. DESIGN CONFORMS WITH 310 CMR 15.00, DEP TITLE 5 REGS, FOR SEPTIC TANKS.
3. ALL REINFORCEMENT PER ASTM C1227-93.
4. TONGUE & GROOVE JOINT SEALED WITH BUTYLE RESIN.
5. TEES AND BAFFLES SOLD SEPARATELY.
6. ALSO AVAILABLE IN H-20 LOADING.

SEPTIC TANK
2500 GALLON

1) ZONING iNFORMATION: GENERAL BUSINESS ISTRICT

2) LOCUS IS NOT LOCATED WITHIN ANY WETLAND JURISDICTIONAL BUFFER OR PERENNIAL STREAM.

3) THE PROP. BUILDING WILL BE USED AS STORAGE AND WAREHOUSE FOR HEAVY CONSTRUCTION EQUIPMENT.

5) THIS PROPERTY IS LOCATED WITHIN A WATER SUPPLY PROTECTION DISTRICT.

6) PARKING SHOWN IS EXISTING. NO ADDITIONAL SPACES ARE PROPOSED.

7) THE STORM WATER INFILTRATION SYSTEM IS BASED ON THE 100 YEAR STORM OF 8.10 IN , THE 25 YEAR STORM OF 6.35 IN , THE 10 YEAR STORM OF 5.22 IN, AND 2 YEAR STORM OF 3.41 IN.

8) THE ENTIRE SITE IS DISTURBED: PROPOSED BUILDING WILL BE PLACED MAINLY OVER EXISTING PAVEMENT.

9) YARD REQUIREMENTS AND LOT AREA REQUIREMENTS FOR GENERAL BUSINESS:

	REQUIRED	PROVIDED
AREA	8000 SF	22457 SF
SIDE YARD	0	
FRONT YARD	15(AS PER SPECIAL PERMIT)	22.3
REAR YARD	30	97

INLET	D	A	B
4"	3'-6"#	3'-0"	2'-6"
5"	3'-6"#	5'-0"	4'-0"
	3'-6"# 3'-6"	4'-0"	3'-0"
	4'-0"	3'-0"	3'-0"
	4'-0" 4'-0"	3'-0"	2'-6"
	4'-6"	3'-0"	2'-6"

NOTES:

FOR INLETS LARGER THAN 10" THE DESIGN AND DIMENSIONS WILL BE DETERMINED FOR EACH PARTICULAR CASE.
PRE-CAST SEPARATORS ARE TO HAVE ALL SPECIFIED HOLES EITHER CORE-BORED OR CAST IN PLACE.

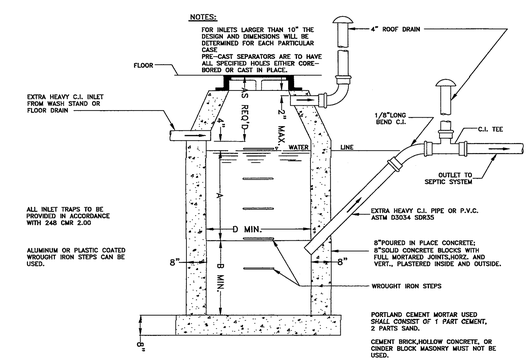

GENERAL CONSTRUCTION NOTES

BASIN TO BE LOCATED OUTSIDE OF BUILDING WHERE POSSIBLE,COVER TO HAVE A CENTER HOLE.

A TIGHT COVER MUST BE USED IF BASIN IS LOCATED INSIDE OF BUILDING.

OPENING SHALL BE NOT LESS THAN 24" DIA.

THE CATCH BASIN SHALL BE SO LOCATED AND CONSTRUCTED THAT SURFACE WATER SHALL BE EXCLUDED.

INLET PIPE SHALL BE AT LEAST FOUR INCHES ABOVE NORMAL WATER LINE.

WHERE SUBJECT TO FROST OR CRUSHING CONDITIONS, OUTLET SHALL BE AT LEAST THREE FEET BELOW THE SURFACE.

THE NEW CATCH BASIN MUST BE FILLED WITH CLEAN WATER BEFORE USING, AND AFTER BEING EMPTIED FOR PERIODIC CLEANING.

ALL OIL AND GASOLINE MUST BE REMOVED BEFORE CLEANING OUT THE BASIN, AND MUST NOT BE DISCHARGED INTO THE SEWER THROUGH OTHER FIXTURES.

SPECIFICATIONS FOR COVERING SPECIAL CASES OR CONDITIONS, SHALL BE APPROVED BY THE LOCAL AUTHORITIES, AND THE AUTHORITIES OF THE M.W.R.A.

WROUGHT IRON STEPS SHALL BE SPACED ABOUT 18" APART.

BOTH VENTS SHALL BE EXTEND INDEPENDENTLY 18" ABOVE THE ROOF, OR AS APPROVED BY THE LOCAL AUTHORITIES, AND THE AUTHORITIES OF THE M.W.R.A.

(Outlet pipe to be 45 degree angle)

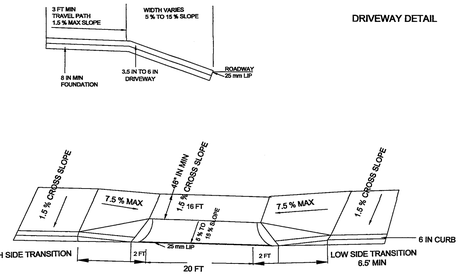

DRIVEWAY DETAIL

GRANITE CORNERS, GRANITE CURBING AND CONCRETE DRIVE APRON & WALKS WILL BE CONSTRUCTED PER CITY SPECIFICATIONS

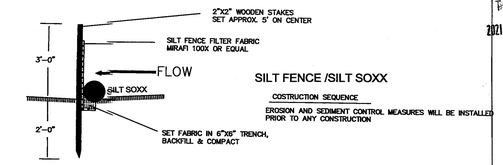

SILT FENCE /SILT SOXX

COSTRUCTION SEQUENCE

EROSION AND SEDIMENT CONTROL MEASURES WILL BE INSTALLED PRIOR TO ANY CONSTRUCTION

PROVIDE SILT FENCE AND ORSILT SOXX
AS DIRECTED BY ENGINEER

TOWN OF AVON
2021 SEP -2 A 9:32
TOWN CLERK

NO EXCAVATION IS ALLOWED WITHIN THE TOWN'S ROW BETWEEN NOVEMBER 15 TH AND APRIL 15 TH. IF AN EMERGENCY EXISTS OR THERE ARE EXTENUATING CIRCUMSTANCES, APPLICANT MAY SEEK PERMISSION FOR SUCH WORK FROM THE DPW COMMISSIONER VIA THE TOWN ENGINEER, IF PERMISSION IS GRANTED, SPECIAL CONSTRUCTION STANDARDS WILL BE APPLIED. APPLICANT OR APPLICANT'S REPRESENTATIVE MUST CONTACT THE TOWN ENGINEERING DEPARTMENT PRIOR TO START WORK FOR CLARIFICATION.

ENGINEER OF RECORD IS RESPONSIBLE FOR THE ON SITE INSPECTIONS OF ALL SUBSURFACE STRUCTURES, THIS INCLUDES BUT NOT LIMITED TO DRAINAGE UTILITIES(INCLUDING SEWER PIPE SLOPE, ROOF LEADER COLLECTION SYSTEM, TRENCH DRAINS, MANHOLES ETC.. ENGINEER OF RECORD MUST ALSO CONDUCT, BOTTOM OF HOLE INSPECTION(S) PRIOR TO DRAINAGE SYSTEM BEING INSTALLED.

DISCUSSION:

THE IMPERVIOUS SURFACE FOR THE LOT POST DEVELOPMENT IS APPROX. 3200 SF.. USING A RUNOFF C OF .3 FOR NATURAL AND .9 FOR IMPERVIOUS SUFACES THE POSTDEVELOPMENT RUNOFF IS AS FOLLOWES:
3200 SF(.6)(8.9/12) = 1425

THE RUNOFF WILL BE STORED AND INFILTRATED UTILIZING DRYWELLS.

METHODOLOGY:
PERCOLATION RATE: 4 MIN. PER INCH
DRYWELL SIZE:
10 FT 6 IN DIAMETER
3 FT DEEP

*BOTTOM AREA = 3.14*D*D/4 = 3.14*10.5*10.5/4 = 86.6 SF*

*VOLUME OF PIT: 3.14*D*D*H/4 = 3.14*6.5*6.5*3 /4 = 99.5 CF*

*VOLUME OF STONE = 3.14*D*D*H/4 = 3.14*10.5**10.5*3/4 = 259.8 CF*

VOID STORAGE VOLUME = VOID RATIO (STONE VOLUME- PIT VOLUME)

STORAGE PER DRYWELL = 99.5 + 56.1 = 155.6 CF
(.35)(259.8-99.5)) = 56.1

INFILTRATION CAPACITY = .25(86.6)(1/12)(24)(60)= (2598 + 155) = 2753 CF/DAY

ONE DRYWELL REQUIRED

TEST PIT
JAN 25, 2021

0-6 IN SANDY LOAM 10YR 5/3
6" - 5' LOAMY SAND 10YR 6/5
5'-9' LOAMY SAND 10YR 6/4

PERC 4 MIN/ IN % 42 IN

MERRIMAC SOLS
OUTWASH

1) ALL WORK TO BE IN ACCORDANCE WITH TOWN AND MASS HIGHWAY STANDARDS.
DRIVEWAY WILL CONFORM TO MA. AAB & NEWTON STANDARDS. A MINIMUM 4 FT (48 IN) WIDTH AND MAX 1.5 % CROSS SLOPE WILL BE MAINTAINED.
2) MINIMUM COMPACTION IN TRENCHES TO BE 90%.
3) PRIOR TO START CONSTRUCTION ALL APPLICABLE LOCAL AGENCIES AND DIG SAFE WILL BE NOTIFIED AT LEAST 72 HOURS PRIOR TO COMMENCING WORK.
4) NO BACKFILLING OF ANY TRENCHES WILL TAKE PLACE UNTIL WORK HAS BEEN INSPECTED AND APPROVED BY THE TOWN CONTRACTOR WILL NOTIFY CITY 48 HOURS IN ADVANCE OF UTILITY INSPECTION.
UTILITY & DRAINAGE SYSTEM MUST BE FULLY EXPOSED FOR THE INSPECTOR.
UTILITIES CAN ONLY BE BACKFILLED ON APPROVAL & SIGNOFF BY INSPECTOR.

5) STREET OPENING, SIDEWALK CROSSING, UTILITY CONNECTION AND TRENCH PERMITS WILL BE OBTAINED FROM THE TOWN PRIOR TO COMMENCING ANY WORK
6) WATER AND SEWER SERVICES WILL BE CUT AND CAPPED AT THE MAIN AND REMOVED FROM SITE, PROPERLY BACKFILLED & INSPECTED BY THE TOWN
UTILITY CONNECTION PERMIT WILL NOT BE ISSUED IF THIS IS NOT ACCOMPLISHED.
7) TRENCH PAVEMENT PERMANENT PATCH WILL CONFORM TOWN STANDARDS AND WITH THE TRENCH SECTION SPECIFIED HEREIN.
8) LOCATION OF UNDERGROUND UTILITIES IS APPROXIMATE. CONTRACTOR WILL NOTIFY DIG SAFE PRIOR TO COMMENCING WORK. CONTRACTOR WILL BE HELD RESPONSIBLE FOR ANY DAMAGE RESULTING FROM INCORRECTLY LOCATED UTILITIES.
9) WITH THE EXCEPTION OF GAS SERVICES, ALL TRENCH WORK WITHIN THE TOWN ROW WILL BE BACKFILLED WITH TYPE III (EXCAVATABLE) CONTROLLED DENSITY FILL AS SPECIFIED BY THE CITY ENGINEERING SPECIFICATIONS. EXCAVATABLE FILL WILL EXTEND TO WITHIN 18 IN OF ROADWAY ASPHALT.
10) LOCATION OF UNDERGROUND UTILITIES IS APPROXIMATE. CONTRACTOR WILL VERIFY UTILITY LOCATIONS THROUGH DIGSAFE. ANY DAMAGE CAUSED BY CONTRACTOR AS A RESULT OF UTILITY LOCATIONS SHOWN WILL BE BORNE SOLELY BY CONTRACTOR AT NO COST TO OWNER.
11) IT IS THE CONTRACTORS RESPONSIBILITY TO CONTACT THE DESIGN ENGINEER FOR ALL REQUIRED INSPECTIONS SUCH AS MATERIALS USED, COMPACTION, UTILITY AS BUILTS, ETC.. ENGINEER ASSUMES NO RESPONSIBILITY *UNLESS HE INSPECTS THE SYSTEM DURING CONSTRUCTION.*
12) THE NEW SEWER SERVICE(S) AND/OR STRUCTURE(S) SHALL BE PRESSURE TESTED OR VIDEOTAPED AFTER FINAL INSTALLATION IS COMPLETE. METHOD OF FINAL INSPECTION SHALL BE DETERMINED SOLELY BY THE CONSTRUCTION INSPECTOR FROM THE TOWN ENGINEERING DIVISION. THE SEWER SERVICE WILL NOT BE ACCEPTED UNTIL ONE OF THE TWO METHODS STATED ABOVE IS COMPLETED. A CERTIFICATE OF OCCUPANCY WILL NOT BE RECOMMENDED UNTIL ALL PIPING AND STRUCTURES ARE TESTED AND PASS.

AS OF JAN 1, 2000, ALL TRENCH EXCAVATION CONTRACTORS SHALL COMPLY WITH MGL 82A, TRENCH EXCAVATION AND SAFETY REQUIREMENTS, TO PROTECT THE PUBLIC FROM UNAUTHORIZED ACCESS TO UNATTENDED TRENCHES. AN EXCAVATION PERMIT IS REQUIRED AND APPLIES TO ALL TRENCHES ON PUBLIC OR PRIVATE PROPERTY.

EXIST WATER & SEWER SERVICES TO BE CUT AND CAPPED PER NOTE 7

PROPOSED SEWER LINES AND MANHOLES TO BE AR TESTED PRIOR TO ACCEPTANCE.

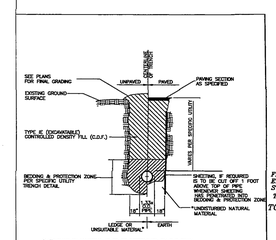

TYPICAL C.D.F. TRENCH DETAIL
NOT TO SCALE

FLOWABLE FILL NOT APPLICABLE TO GAS TRENCHES

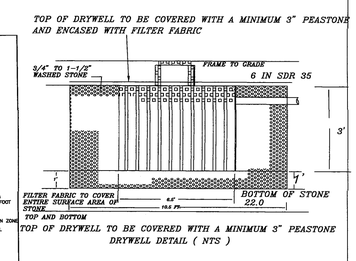

DRYWELL DETAIL (NTS)

ALL ROOF LEADER DRAINAGE TO GO INTO DRYWELL

TYPICAL TRENCH REPAIR & PAVEMENT SECTION DETAIL

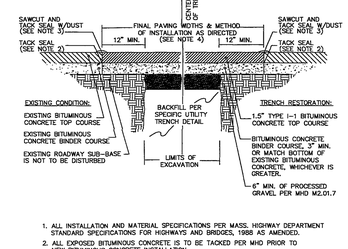

1. ALL INSTALLATION AND MATERIAL SPECIFICATIONS PER MASS. HIGHWAY DEPARTMENT STANDARD SPECIFICATIONS FOR HIGHWAYS AND BRIDGES, 1988 AS AMENDED.
2. ALL EXPOSED BITUMINOUS CONCRETE IS TO BE TACKED PER MHD PRIOR TO NEW BITUMINOUS CONCRETE INSTALLATION.
3. ALL EXPOSED JOINTS ARE TO BE SEALED WITH TACK AND STONE DUST.
4. ANY TOP COURSE APPLIED AT A WIDTH OF 6' WIDE OR GREATER IS TO BE PLACED BY MACHINE/BOX SPREADER WHEN & AS DIRECTED BY THE TOWN

NOTE: ALL GAS TRAP MANHOLES SHALL MEET THE REQUIREMENTS OF THE TOWN DEPARTMENT OF PUBLIC WORKS.

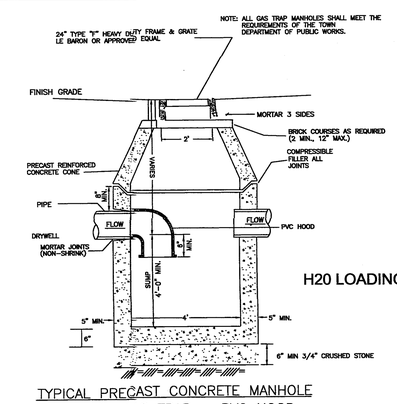

H20 LOADING

TYPICAL PRECAST CONCRETE MANHOLE
WITH GAS TRAP - PVC HOOD
(NOT TO SCALE)
H20 LOADING

PROPOSED BUILDING
105 MEMORIAL DRIVE
AVON , MA.
SCALE: 1 IN = 20 FT

JUNE 20, 2021 JULY 27, 2021
AUG 15, 2021 SEPT 1, 2021

ESSEX ENG. & SURVEY
PO BOX 650217 WEST NEWTON
MA. 02465
617-797-7342
FRANK.IEBBA@GMAIL.COM

COMMONWEALTH OF MASSACHUSETTS
FRANK IEBBA
No. 37734
PROFESSIONAL LAND SURVEYOR

COMMONWEALTH OF MASSACHUSETTS
FRANK IEBBA
No. 33118
REGISTERED PROFESSIONAL ENGINEER